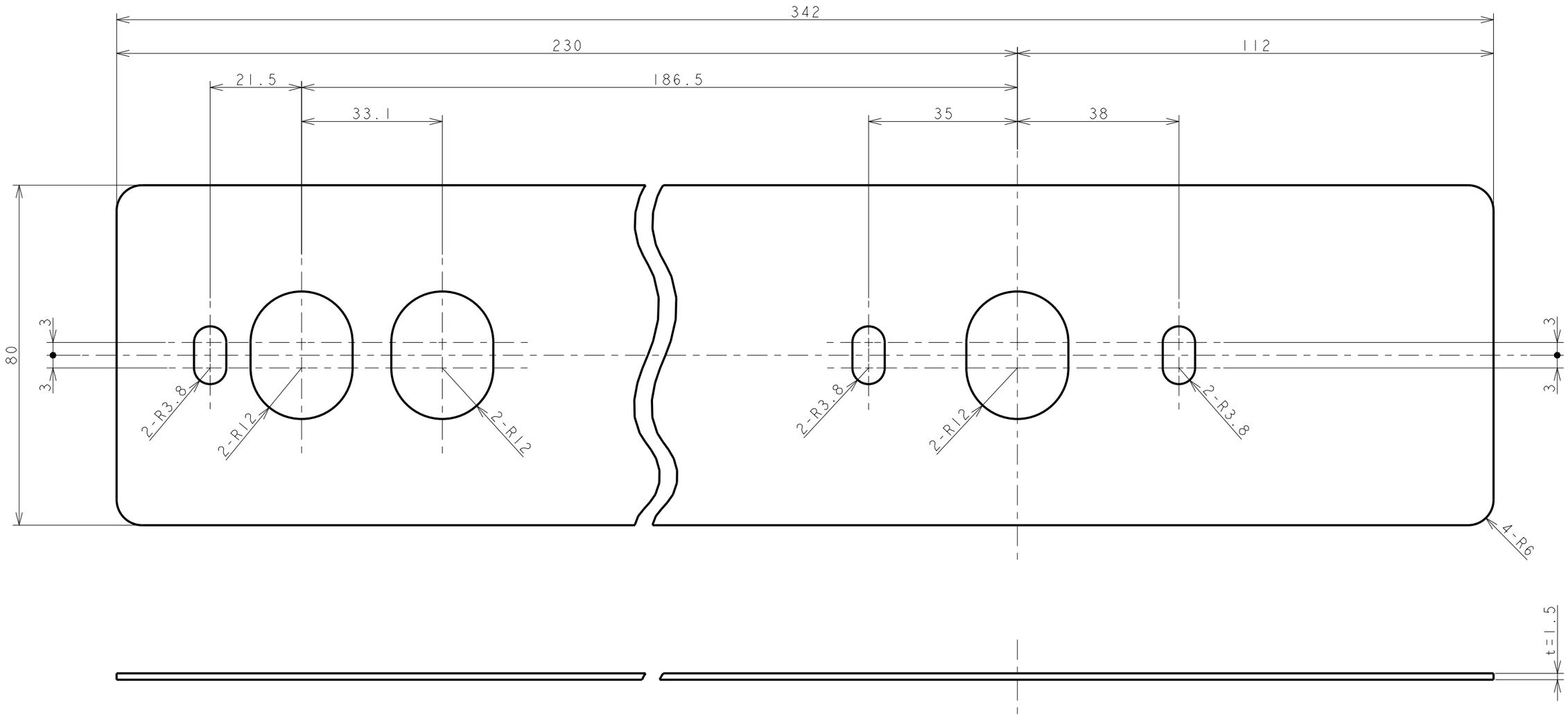
342
230
112
21.5
186.5
33.1
35
38
80
3
3
3
3
2-R3.8
2-R12
2-R12
2-R3.8
2-R12
2-R3.8
4-R6
t=1.5